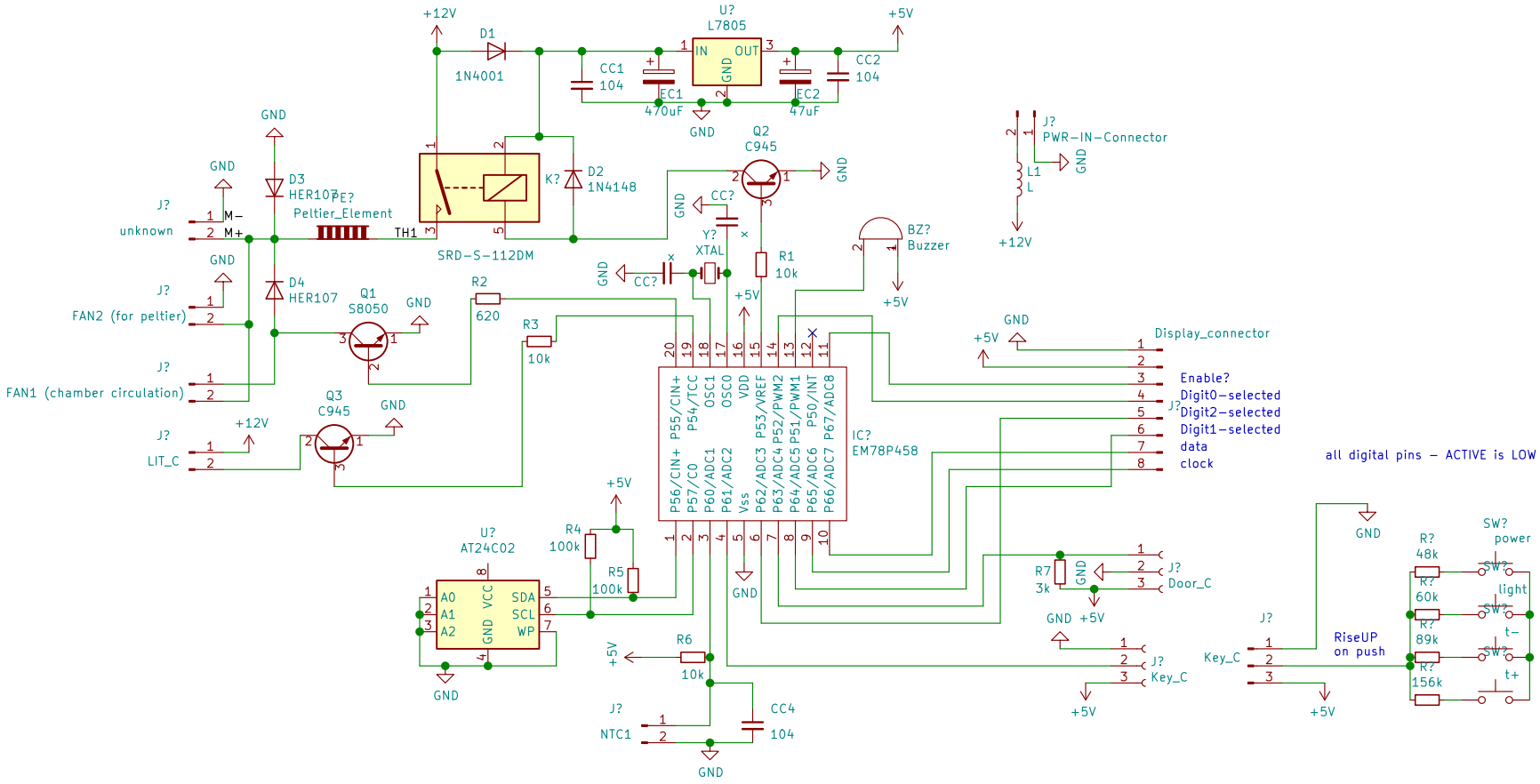
+12V
D1
1N4001
U?
L7805
IN
OUT
GND
+5V
CC1
104
EC1
470uF
EC2
47uF
CC2
104
GND
Q2
C945
J?
PWR-IN-Connector
L1
L
+12V
D3
HER107
PE?
Peltier_Element
TH1
SRD-S-112DM
K?
D2
1N4148
J?
unknown
M-
M+
D4
HER107
Q1
S8050
R2
620
R3
10k
J?
FAN2 (for peltier)
J?
FAN1 (chamber circulation)
J?
LIT_C
Q3
C945
CC?
Y?
XTAL
R1
10k
BZ?
Buzzer
IC?
EM78P458
P55/CIN+
P54/TCC
OSC1
OSC0
VDD
P53/VREF
P52/PWM2
P51/PWM1
P50/INT
P67/ADC8
P56/CIN+
P57/CO
P60/ADC1
P61/ADC2
Vss
P62/ADC3
P63/ADC4
P64/ADC5
P65/ADC6
P66/ADC7
Display_connector
Enable?
Digit0-selected
Digit2-selected
Digit1-selected
data
clock
all digital pins - ACTIVE is LOW
U?
AT24C02
A0
A1
A2
VCC
SDA
SCL
WP
R4
100k
R5
100k
R6
10k
J?
NTC1
CC4
104
R7
3k
J?
Door_C
J?
Key_C
R?
48k
R?
60k
R?
89k
R?
156k
SW?
power
light
t-
t+
RiseUP
on push